MACHINE SHOP
O Scale Series MT

ME-812
Single Cylinder Mill Engine

Suggested Assembly Instructions

Use a fine file and a new №11 blade to remove any flash or parting lines from all of the castings. A set of fine hand drill bits and a set of cutting reamers are useful for fitting and preparing the various pieces.

A five-minute, two-part epoxy is used in favor of ACC cement. Once the epoxy has set for about seven or eight minutes, use the tip of a blade or fine pointed tweezers to "pick" and visible or excess epoxy away.

The pieces fall into two categories. Those that will be painted and those that will be worn metal in coloration. Visit my website for pictures of several finished mill engines. This provides great information on coloring and weathering.

Blacken the brass and white metal pieces with a commercial blackening agent like A-West Blacken-It. Dunk each piece, one at a time, into the chemical. Use a small paint brush to dislodge any trapped air bubbles and insuring the entire surface of the casting is blackened. Remove the casting and place it into a cup of fresh water so all of the chemical is washed off. This is very important. Remove the castings from the water and set out allowing to dry.

Buff each piece carefully with a felt wheel and a dremel. This creates a wonderful aged and worn metallic patina. A bristle brush also works well chucked in a dremel tool.

Paint the bed (1) and trunk (2) casting. Begin with the cement bed portion. Generally I wanted a grimy, greasy appearance layered over aged concrete. Use Floquil Aged Concrete as a base with a little Reefer White blotted on top at random to lighten it up. Then powdered artist chalk can be applied to weather and age it.

The trunk is painted with a mixture of 80% Grimy Black/20% Boxcar Red. Keep a small brush at hand that you can dip in solvent and brush away any paint you get on the bed. Once dry a combination of Polly Oily Black and dark chalk powder is used to create oily buildup and gunk around the base of the trunk.

Clear the holes on the underside of the cylinder (3) for the drain cocks (20). The left side of the trunk has two holes spotted for the valve and stem guide (21). Drill these out and check the fit of the guide. Clear the holes in the lower crosshead guides then check the fit with the upper guides. Drill out the valve gland about ⅛" deep and then be sure the stem of the valve and stem guide fits cleanly inside. Drill the tiny hole in the side of the shutoff guide of the lubricator (19) for the syphon tube (27)

The next series of steps will include the assembly and installation of the parts pictured below. Paint these parts with Floquil Brass then check the fit of each piece.

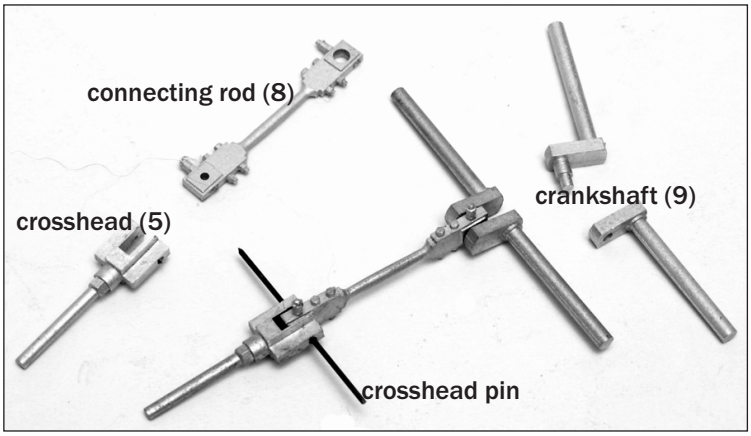

Parts List

1. engine bed (resin)
2. trunk (resin)
3. cylinder and valve assembly
4. rear cylinder head
5. crosshead
6. upper crosshead guide (2)
7. lower crosshead guide (2)
8. connecting rod
9. crankshaft (2 pieces)
10. RH bearing cap
11. LH bearing cap
12. 42" flywheel
13. 54" flywheel
14. eccentric, strap and rod
15. governor drive pulley
16. throttle and governor valve
17. governor
18. valve wheel
19. lubricator
20. cylinder drain cock (wire)
21. valve stem and guide
22. exhaust pipe fittings
23. elbows (2)
24. steam pipe (brass tube)
25. exhaust pipe (brass tube)
26. governor belt (tyvek)
27. syphon tube (wire)
28. crosshead pin (wire)

Assemble the crankshaft halves with the connecting rod then epoxy this assembly to the bearings on the trunk. Epoxy the bearing caps (10 (11) in place and allow this to set. Now you can install the crosshead and its pin as shown below. Do not use any glue. Trim the pin flush on each side.

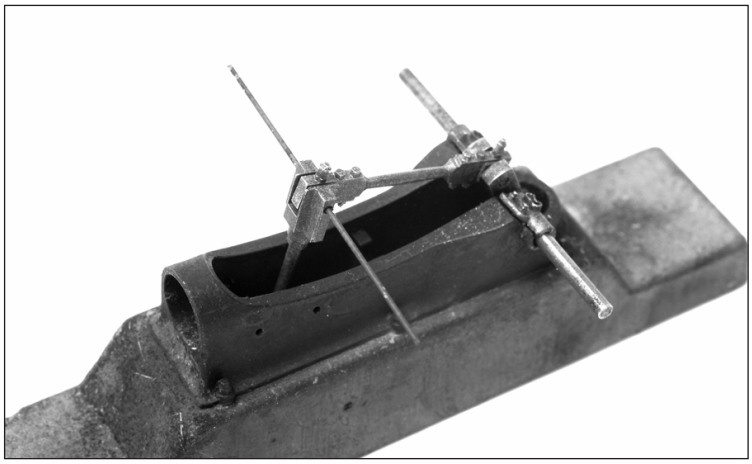

Epoxy the upper and lower crosshead guides together as shown below. Paint them brass.

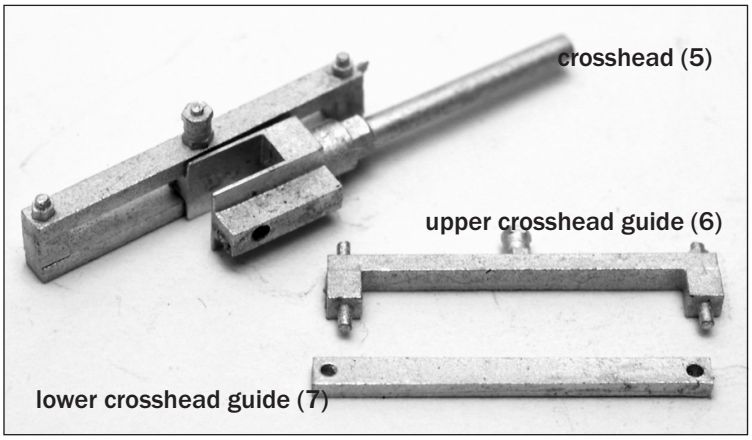

Now place the crosshead between the guides and epoxy this to the pads in the trunk as shown below.

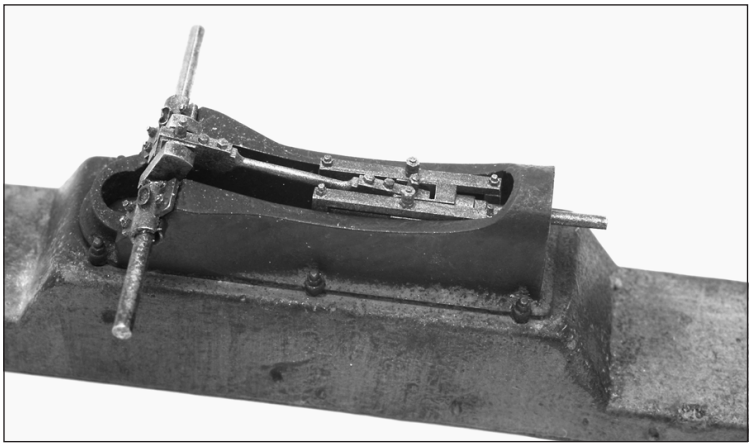

Epoxy the rear cylinder head (4) to the back of the cylinder with the gland nuts aligned horizontally. Cut two short drain cocks from the thin brass wire and epoxy these into the previously drilled holes in the bottom of the cylinder. Epoxy the valve stem and guide into the previously drilled holes in the left side of the trunk.

Check the fit of the throttle and governor valve (16) and the exhaust pipe fitting (22) in the cylinder valve chest making any necessary adjustments. Now you can epoxy the cylinder and valve assembly to the trunk making sure the valve chest is truly horizontal. Check the fit of the steam pipe (24) and governor (17) on the throttle and governor valve. Epoxy the throttle and governor valve in place making sure it is level. Paint the valve stem and guide, cylinder and valve, and throttle and governor valve assemblies with the same mixture of 80% Grimy Black/20% Boxcar Red as the trunk was painted.

Epoxy the governor in place being sure it is level and that the pulley is parallel to the trunk. Paint the valve wheel (18) a bright red, dull it with a little chalk powder, then epoxy it in place nice and straight.

Check the fit of the eccentric, strap and rod assembly (14). It will be snug. Once satisfied epoxy it to the valve stem pin while sliding over the crankshaft. Now epoxy the governor drive pulley (15) tight against the eccentric. Cut the governor belt (26) from the sheet of white "tyvek" plastic material about 1/32" x 4" long then stain it with a diluted Floquil Roof Brown wash. ACC one end to the bottom of the governor drive pulley then wrap it tightly securing the other end with a drop of ACC back where you started. Cut off any excess.

Epoxy the flywheels (12) (13) in place. The larger wheels rim should be buffed until it is smooth and has a nice worn sheen.

Drill two .015" diameter holes in the 1½" long brass tube. Drill them ⅜" apart, starting 3/16" from one end. They should be in a straight line. See the template below.

steam pipe (24) drilling template

Epoxy the metering valve stem on the lubricator (19) in the lower hole. From the thin wire bend and form the syphon tube (27) bu making a small loop on the lower end and a radius bend on the upper. Trim it to size and epoxy it in place.

The steam and exhaust pipes (24) (25) and their fittings (22) and elbows (23) should not be installed until the boiler is completed and both models are ready for permanent installation. The pipes can then be cut to length and oriented to suit the location of each piece. Only the vertical sections of the pipe are included in this kit, the horizontal pipes are included in the boiler along with instructions to join them.

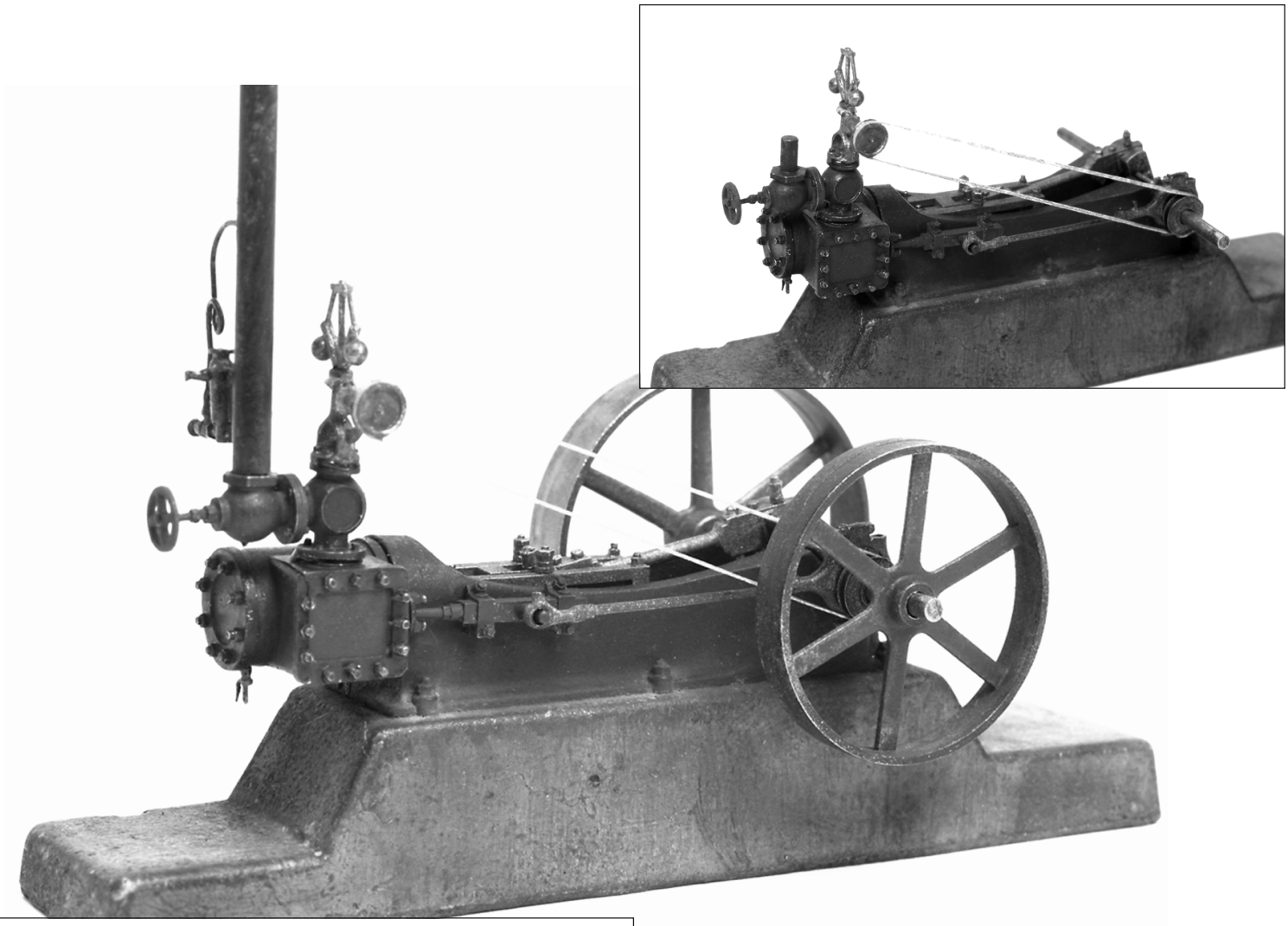

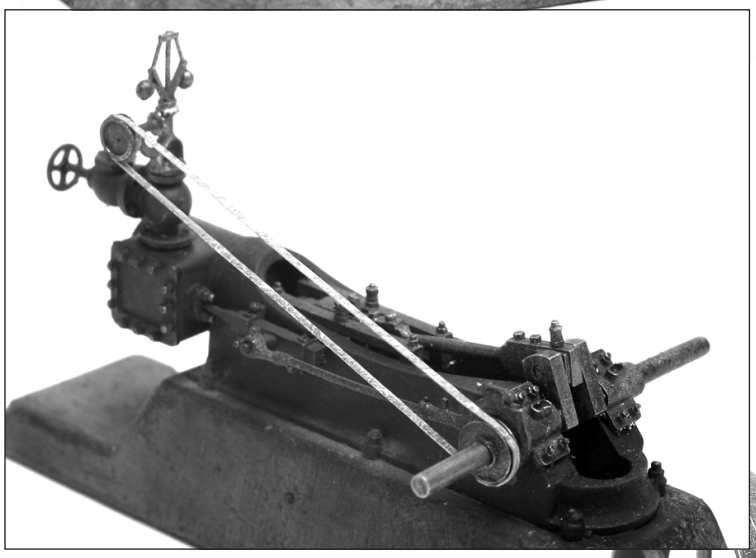

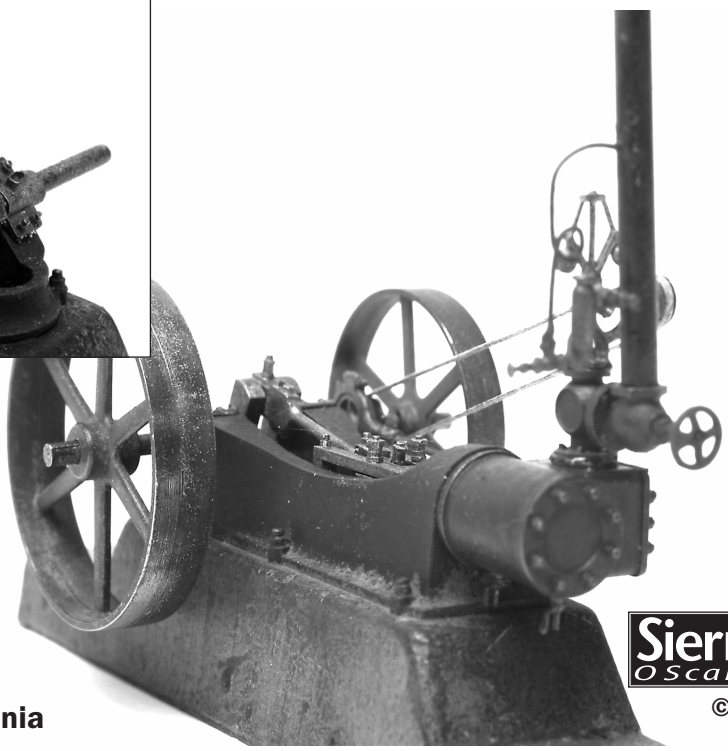

ME-812
Single Cylinder Mill Engine

Nagle Engine & Boiler Works Erie, Pennsylvania

SierraWest™ O Scale Classics

8 x 12
Mill Engine

Nagle Engine & Boiler Works
Erie, Pennsylvania

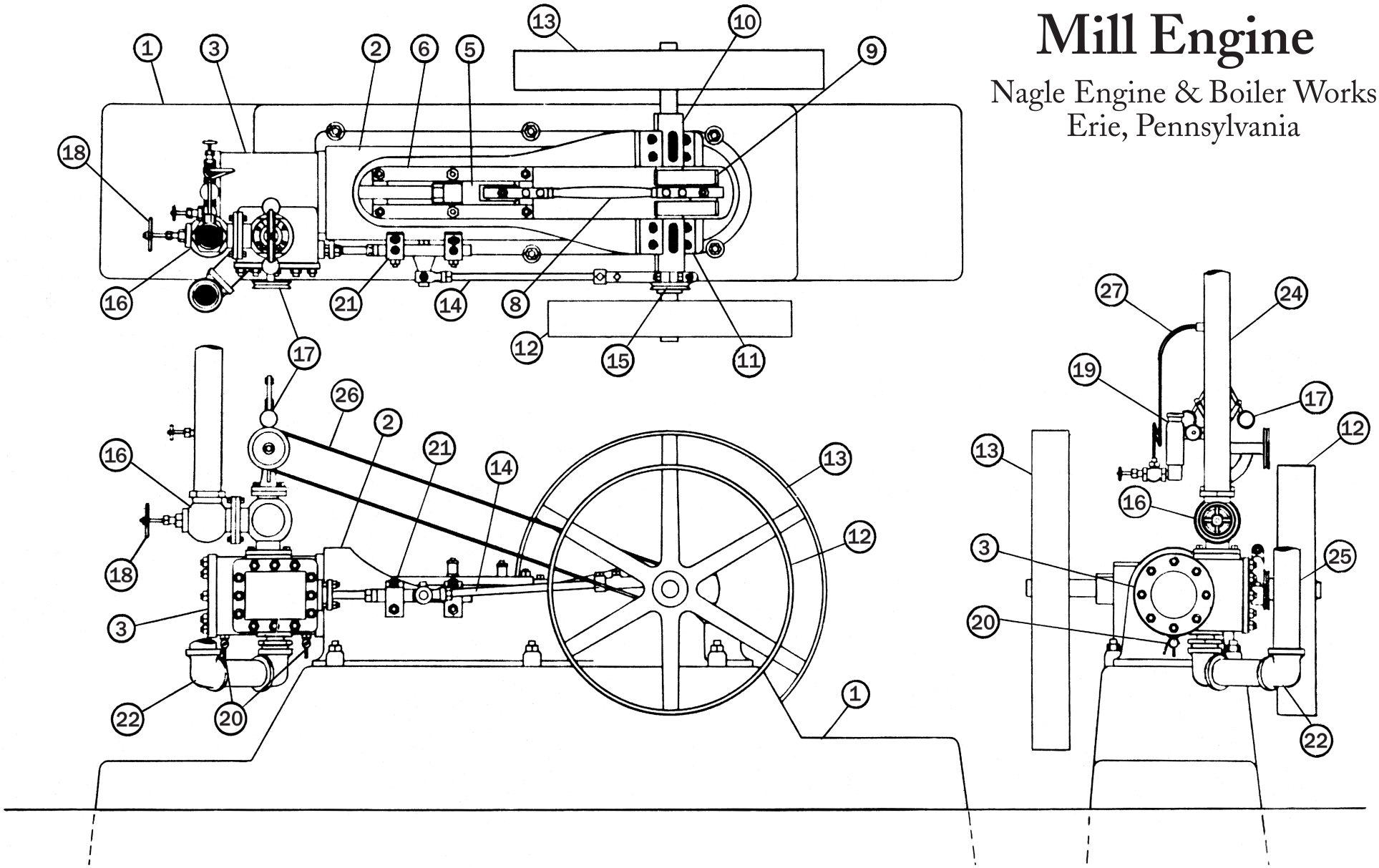

SierraWest
O Scale Classics

ME-812

Single Cylinder Mill Engine